REV	ECO	REV BY	DATE	APPD	DATE

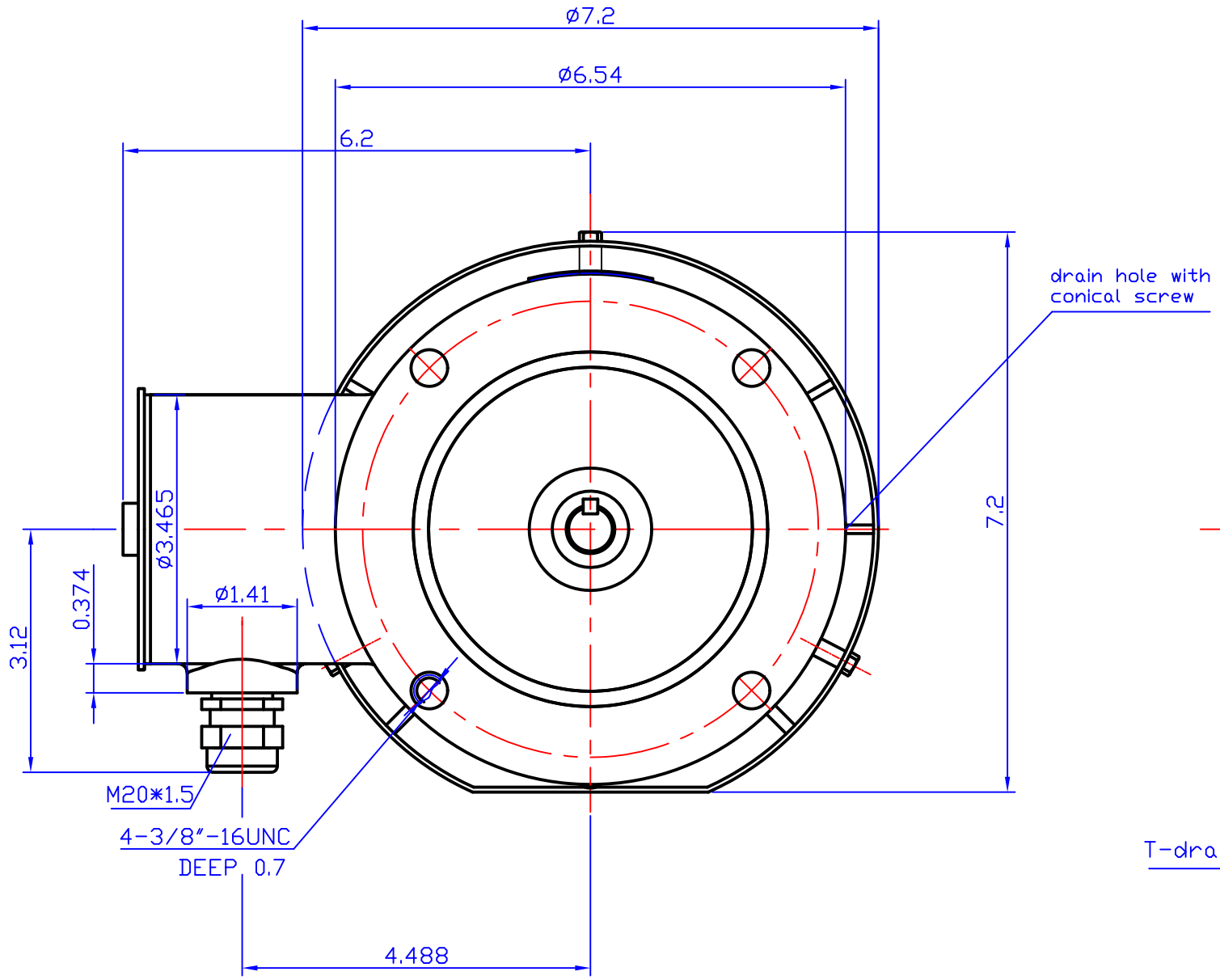

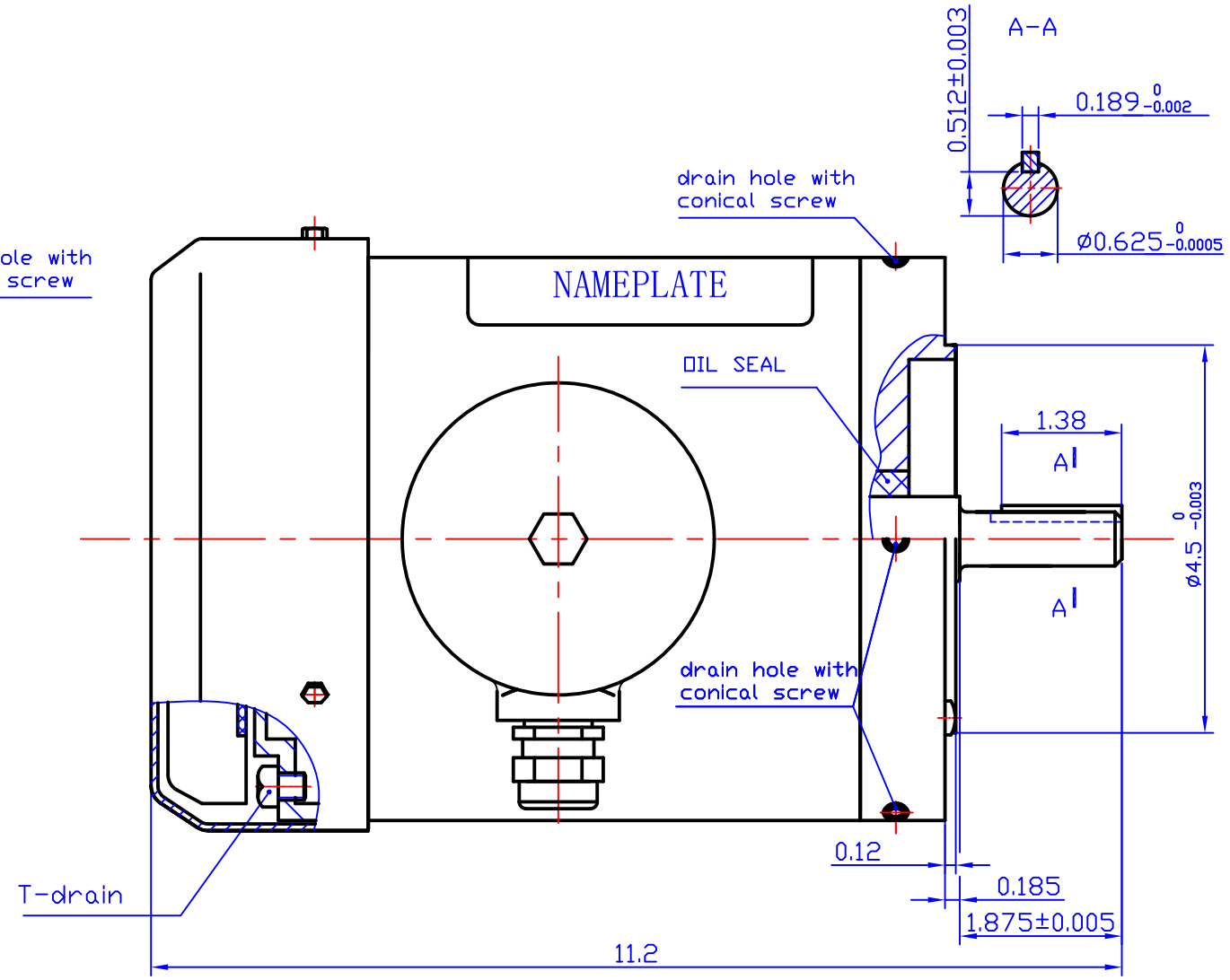

IND#	PH	HP	VOLT	Hz	RPM	S.F.	FRAME	ENCLOSURE	INSL.	DUTY	IP
SS342UFC	3	3/4	230/460	60	3450	1.15	56C	TEFC	F	CONT.	69K
		1/2	190/380	50	2850						

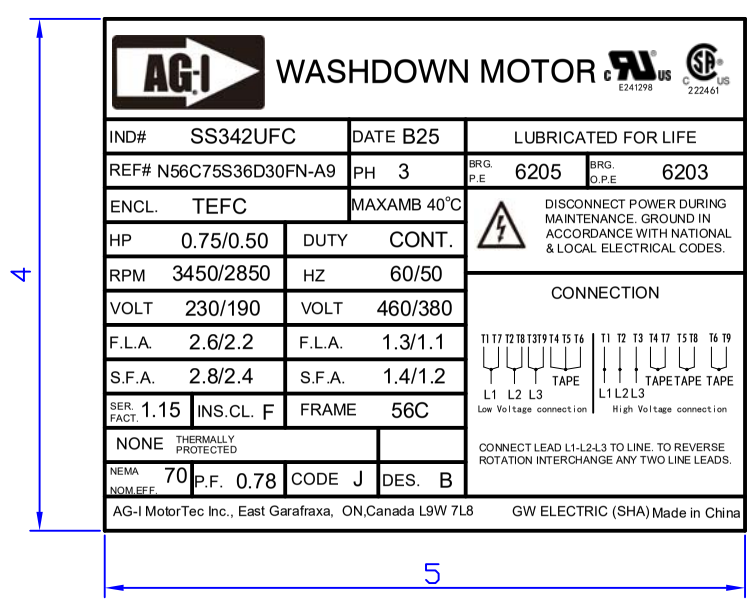

AG-I WASHDOWN MOTOR c UL us E241298 CSA C US 222461

IND# SS342UFC		DATE B25	LUBRICATED FOR LIFE		
REF# N56C75S36D30FN-A9		PH 3	BRG. P.E 6205	BRG. O.P.E 6203	
ENCL. TEFC		MAXAMB 40°C	DISCONNECT POWER DURING MAINTENANCE. GROUND IN ACCORDANCE WITH NATIONAL & LOCAL ELECTRICAL CODES.		
HP 0.75/0.50	DUTY CONT.				
RPM 3450/2850	HZ 60/50		CONNECTION		
VOLT 230/190	VOLT 460/380		T1 T7 T2 T8 T3 T9 T4 T5 T6 — L1 L2 L3 TAPE — Low Voltage connection	T1 T2 T3 T4 T7 T5 T8 T6 T9 — L1 L2 L3 TAPE TAPE TAPE — High Voltage connection	
F.L.A. 2.6/2.2	F.L.A. 1.3/1.1				
S.F.A. 2.8/2.4	S.F.A. 1.4/1.2				
SER. FACT. 1.15	INS.CL. F	FRAME 56C			
NONE THERMALLY PROTECTED			CONNECT LEAD L1-L2-L3 TO LINE. TO REVERSE ROTATION INTERCHANGE ANY TWO LINE LEADS.		
NEMA NOM.EFF. 70	P.F. 0.78	CODE J	DES. B		
AG-I MotorTec Inc., East Garafraxa, ON,Canada L9W 7L8			GW ELECTRIC (SHA) Made in China		

DR BY: MA XIAOLI		AG-I MOTORTEC INC.,	
APPD:		DESCRIPTION	
FIRST ANGLE PROJECTION	EDS DATE 2025.3.5	SS342UFC MOTOR OUTLINE & NAMEPLATE	
	VERSION	SIZE A3	DWG NO
		SCALE 1:2	SHEET

CONFIDENTIAL PROPERTY OF GW ELECTRIC (SHANGHAI) CORPORATION AND ARE NOT TO BE DISCLOSED, DUPLICATED, OR OTHERWISE USED WITHOUT THE WRITTEN CONSENT OF GW ELECTRIC (SHANGHAI) CORPORATION, OR ITS AGENT, AG-I MOTORTEC INC.
-ALL RIGHTS RESERVED.