REV	ECO	REV BY	DATE	APPD	DATE

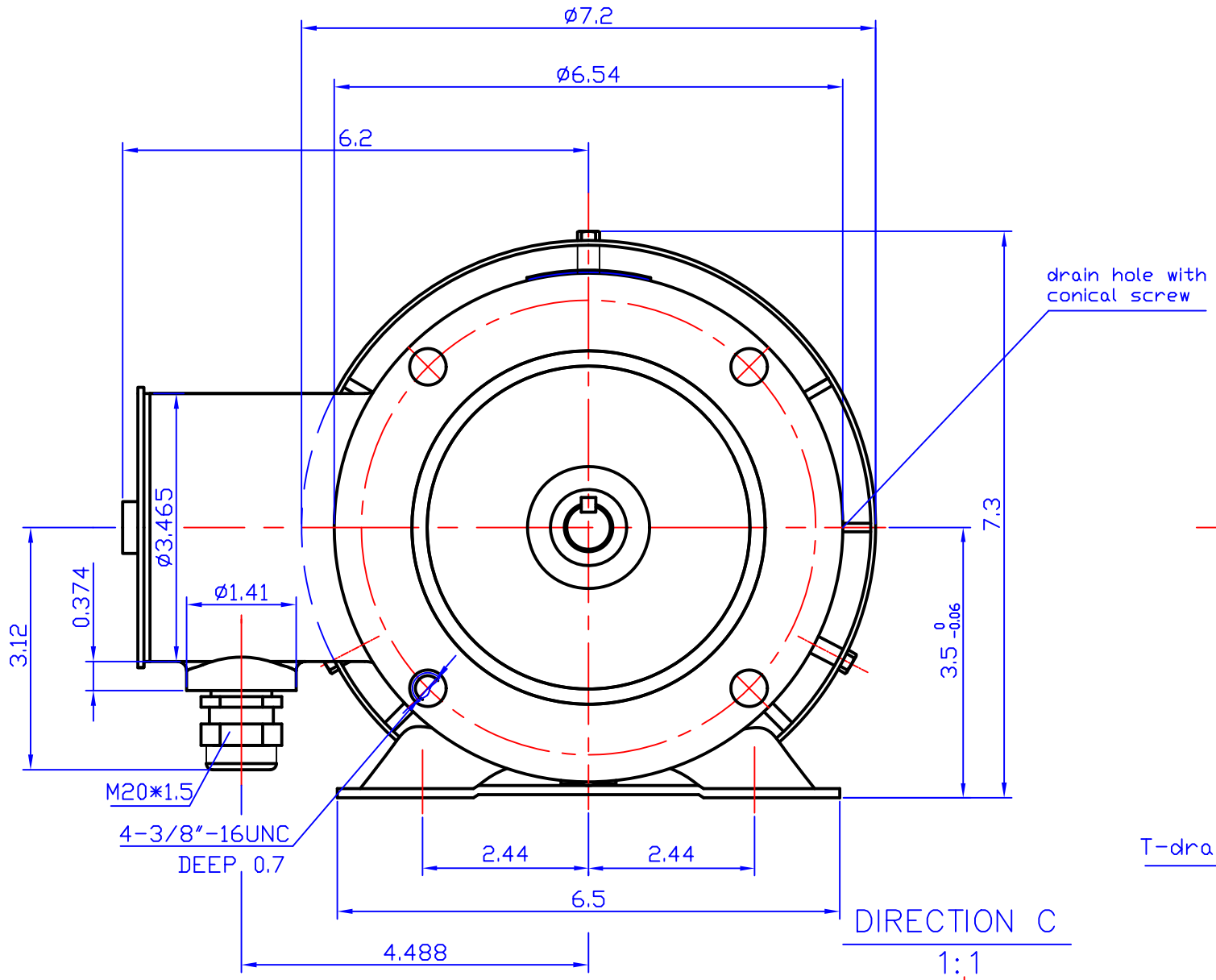

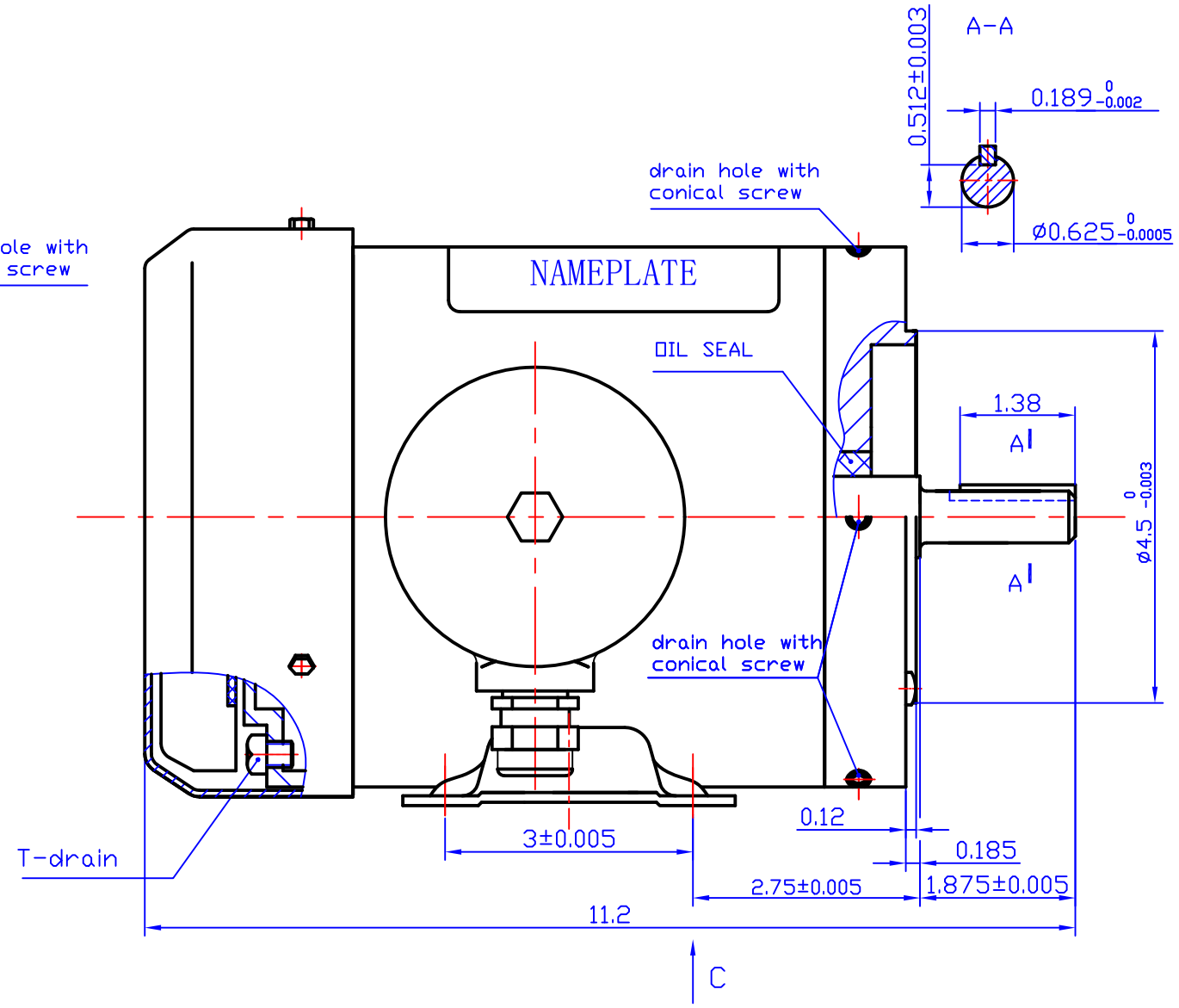

DIRECTION C
1:1

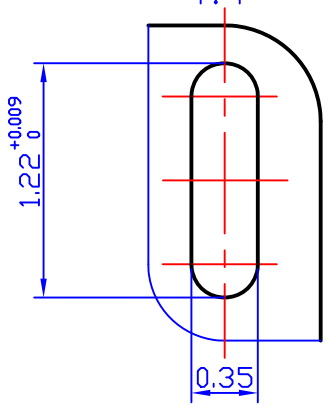

IND#	PH	HP	VOLT	Hz	RPM	S.F.	FRAME	ENCLOSURE	INSL.	DUTY	IP
SS342UF	3	3/4	230/460	60	3450	1.15	56C	TEFC	F	CONT.	69K
		1/2	190/380	50	2850						

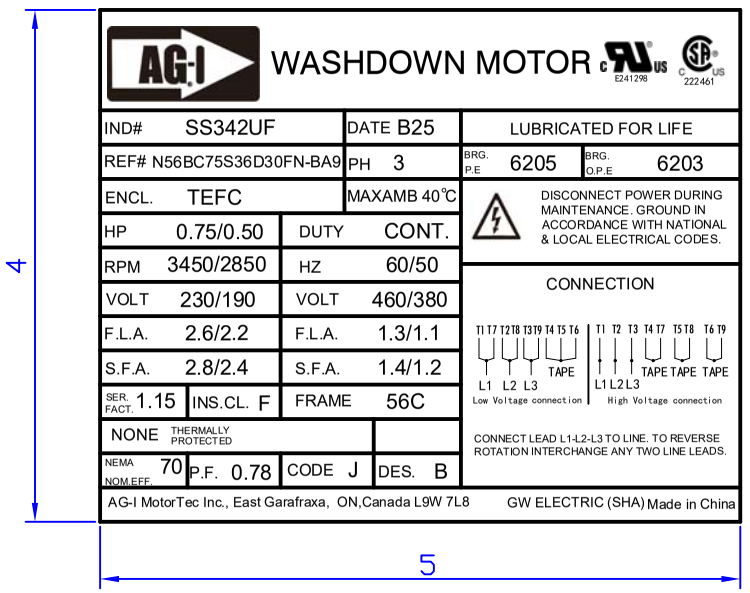

AG-I WASHDOWN MOTOR

IND# SS342UF	DATE B25	LUBRICATED FOR LIFE	
REF# N56BC75S36D30FN-BA9	PH 3	BRG. P.E 6205	BRG. O.P.E 6203
ENCL. TEFC	MAXAMB 40℃		
HP 0.75/0.50	DUTY CONT.		
RPM 3450/2850	HZ 60/50		
VOLT 230/190	VOLT 460/380		
F.L.A. 2.6/2.2	F.L.A. 1.3/1.1		
S.F.A. 2.8/2.4	S.F.A. 1.4/1.2		
SER. FACT. 1.15	INS.CL. F	FRAME 56C	
NONE THERMALLY PROTECTED			
NEMA NOM.EFF. 70	P.F. 0.78	CODE J	DES. B

DISCONNECT POWER DURING MAINTENANCE. GROUND IN ACCORDANCE WITH NATIONAL & LOCAL ELECTRICAL CODES.

CONNECTION

CONNECT LEAD L1-L2-L3 TO LINE. TO REVERSE ROTATION INTERCHANGE ANY TWO LINE LEADS.

AG-I MotorTec Inc., East Garafraxa, ON,Canada L9W 7L8 GW ELECTRIC (SHA) Made in China

DR BY: MA XIAOLI

APPD:

FIRST ANGLE PROJECTION

EDS DATE 2025.3.5

VERSION

CONFIDENTIAL PROPERTY OF GW ELECTRIC (SHANGHAI) CORPORATION AND ARE NOT TO BE DISCLOSED, DUPLICATED, OR OTHERWISE USED WITHOUT THE WRITTEN CONSENT OF GW ELECTRIC (SHANGHAI) CORPORATION, OR ITS AGENT, AG-I MOTORTEC INC.
-ALL RIGHTS RESERVED.

AG-I MOTORTEC INC.,

DESCRIPTION

SS342UF MOTOR OUTLINE & NAMEPLATE

SIZE A3

DWG NO

SCALE 1:2

SHEET