REV	ECO	REV BY	DATE	APPD	DATE

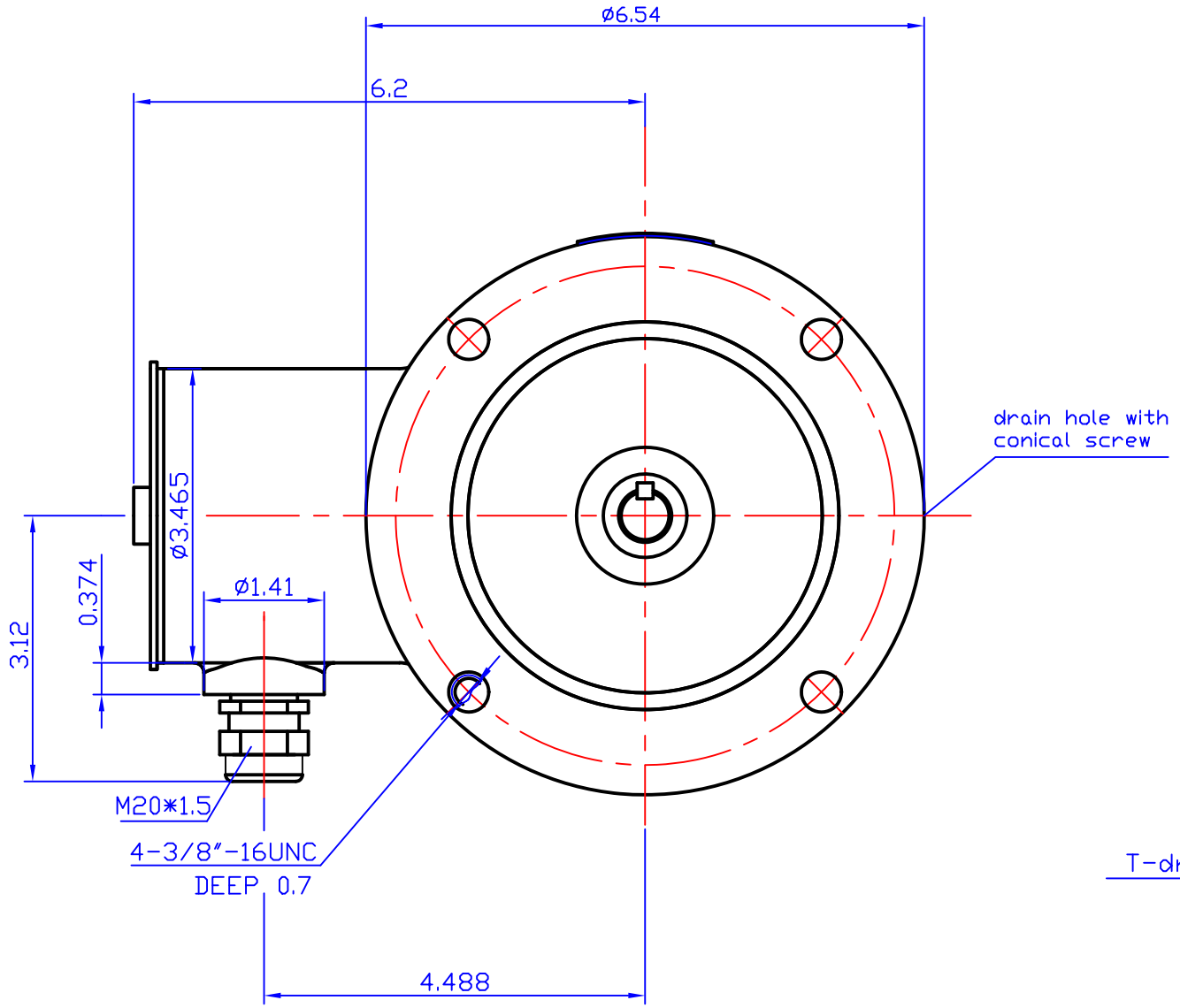

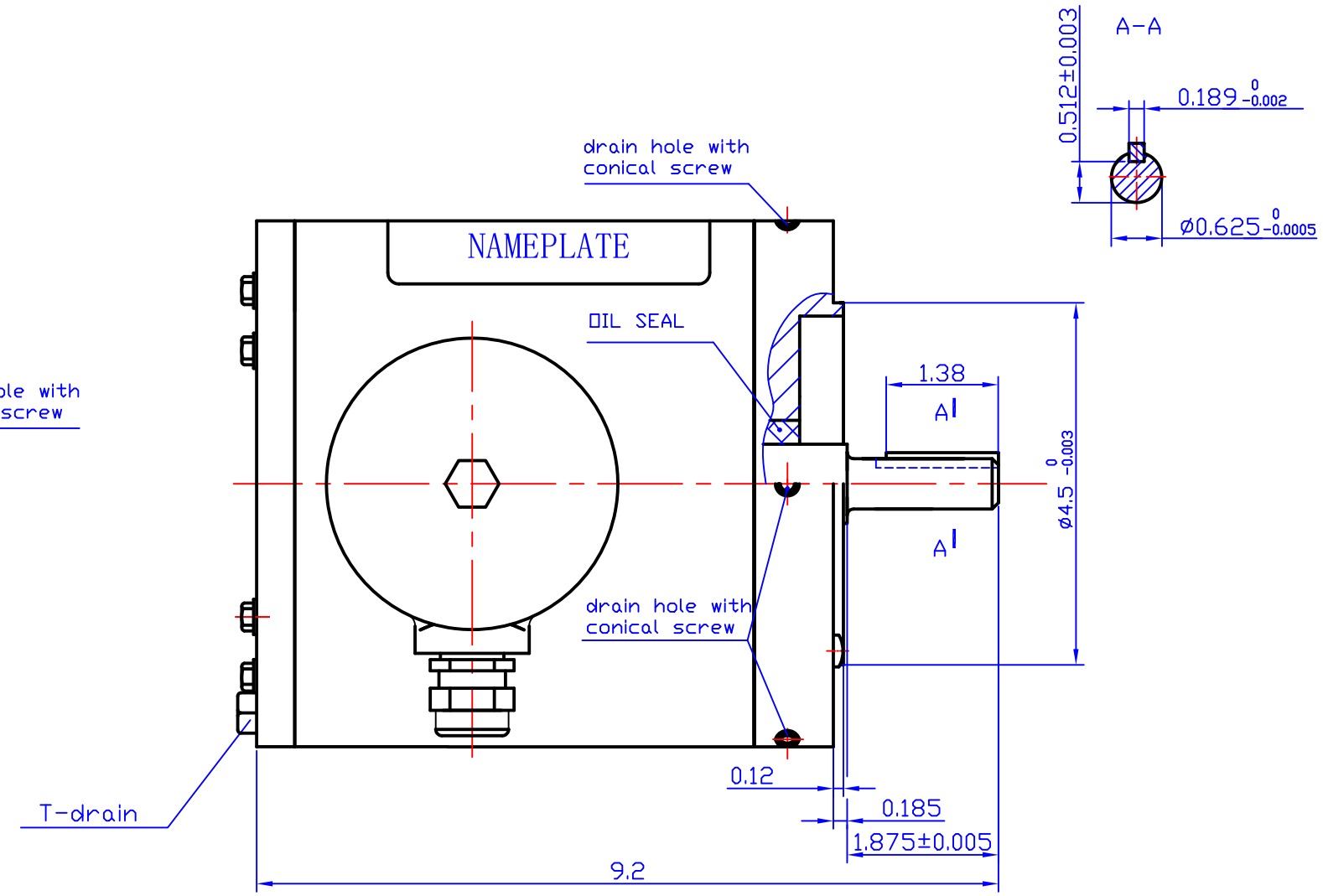

IND#	PH	HP	VOLT	Hz	RPM	S.F.	FRAME	ENCLOSURE	INSL.	DUTY	IP
SS134UNC	3	1/3	230/460	60	1725	1.15	56C	TENV	F	CONT.	69K
		1/4	190/380	50	1450						

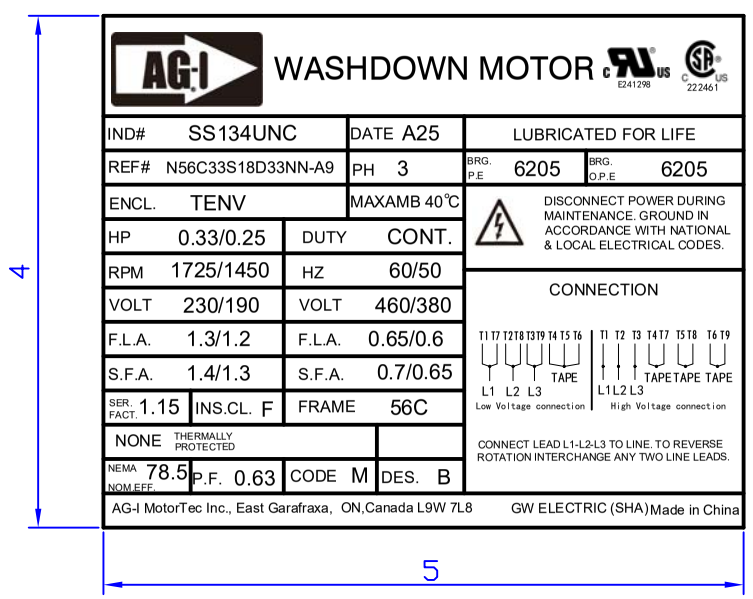

AG-I WASHDOWN MOTOR

IND#	SS134UNC	DATE	A25	LUBRICATED FOR LIFE	
REF#	N56C33S18D33NN-A9	PH	3	BRG. P.E 6205	BRG. O.P.E 6205
ENCL.	TENV	MAXAMB 40℃			
HP	0.33/0.25	DUTY	CONT.		
RPM	1725/1450	HZ	60/50		
VOLT	230/190	VOLT	460/380		
F.L.A.	1.3/1.2	F.L.A.	0.65/0.6		
S.F.A.	1.4/1.3	S.F.A.	0.7/0.65		
SER. FACT. 1.15	INS.CL. F	FRAME	56C		
NONE THERMALLY PROTECTED					
NEMA NOM.EFF. 78.5	P.F. 0.63	CODE M	DES. B		

DISCONNECT POWER DURING MAINTENANCE. GROUND IN ACCORDANCE WITH NATIONAL & LOCAL ELECTRICAL CODES.

CONNECTION

T1 T7 T2 T8 T3 T9 T4 T5 T6 — TAPE — L1 L2 L3 — Low Voltage connection

T1 T2 T3 T4 T7 T5 T8 T6 T9 — TAPE TAPE TAPE — L1 L2 L3 — High Voltage connection

CONNECT LEAD L1-L2-L3 TO LINE. TO REVERSE ROTATION INTERCHANGE ANY TWO LINE LEADS.

AG-I MotorTec Inc., East Garafraxa, ON,Canada L9W 7L8 — GW ELECTRIC (SHA) Made in China

DR BY: MA XIAOLI

APPD:

FIRST ANGLE PROJECTION

EDS DATE 2025.3.5

VERSION

CONFIDENTIAL PROPERTY OF GW ELECTRIC (SHANGHAI) CORPORATION AND ARE NOT TO BE DISCLOSED, DUPLICATED, OR OTHERWISE USED WITHOUT THE WRITTEN CONSENT OF GW ELECTRIC (SHANGHAI) CORPORATION, OR ITS AGENT, AG-I MOTORTEC INC.
-ALL RIGHTS RESERVED.

AG-I MOTORTEC INC.,

DESCRIPTION

SS134UNC MOTOR OUTLINE & NAMEPLATE

SIZE A3

DWG NO

SCALE 1:2

SHEET