REV	ECO	REV BY	DATE	APPD	DATE

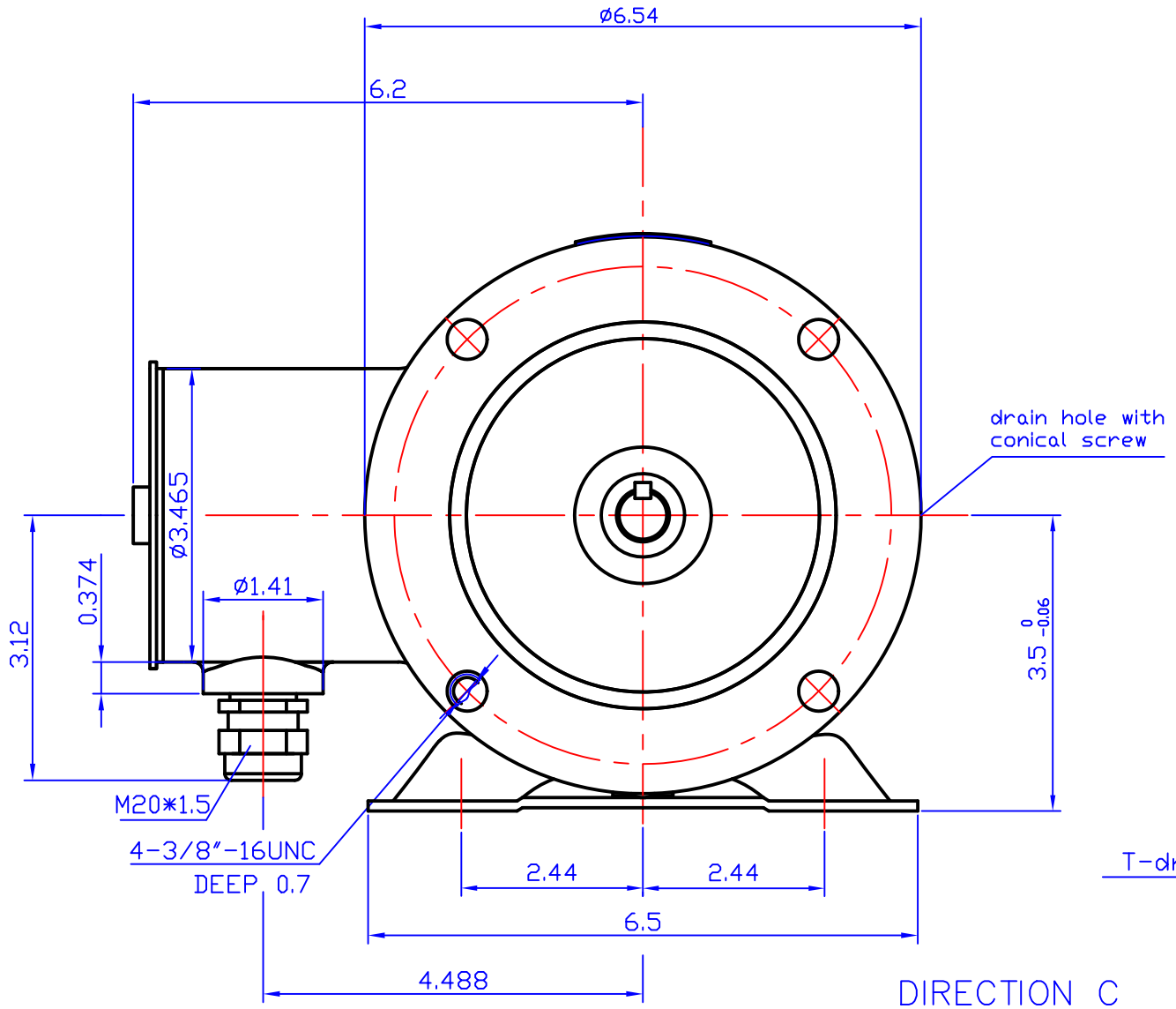

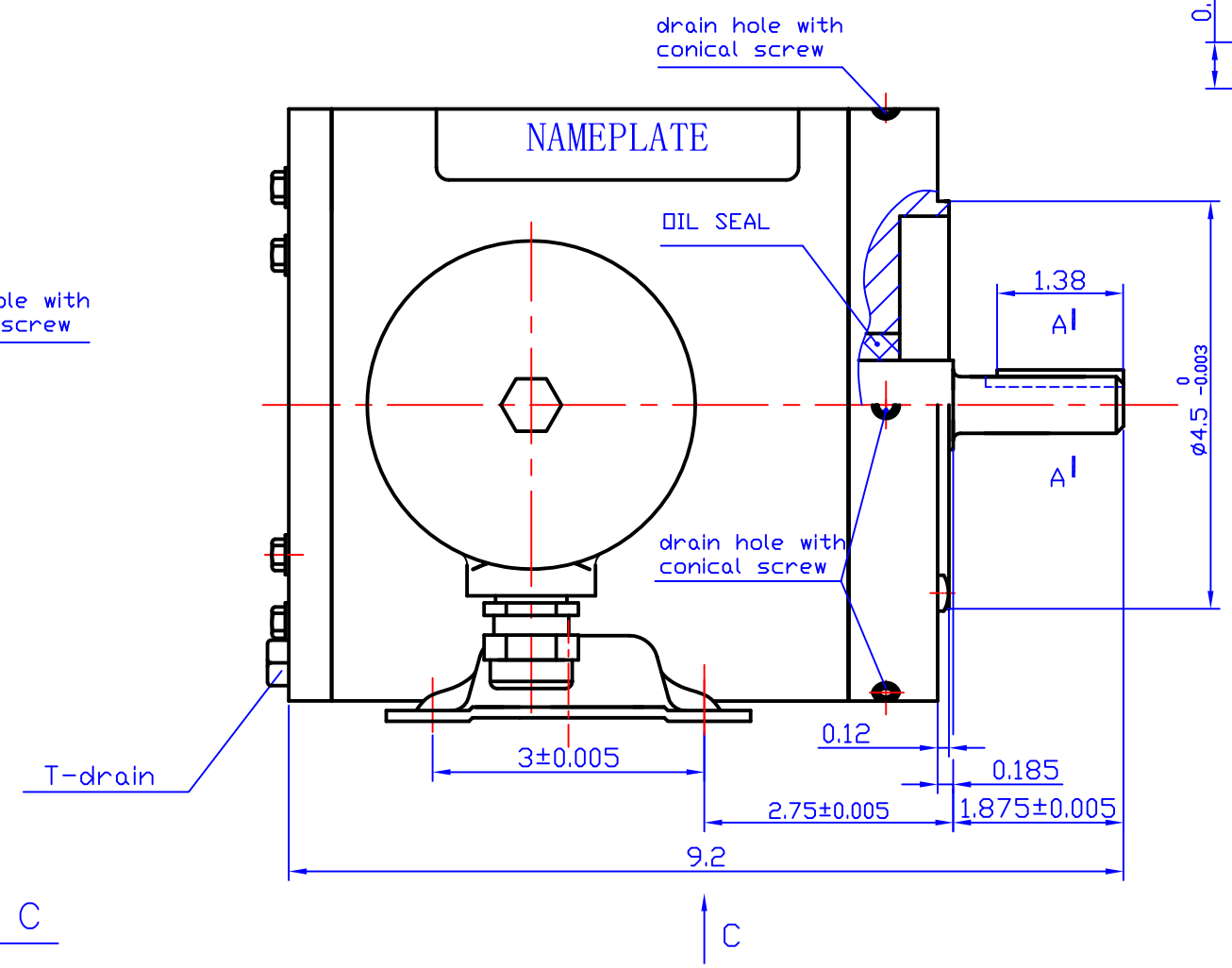

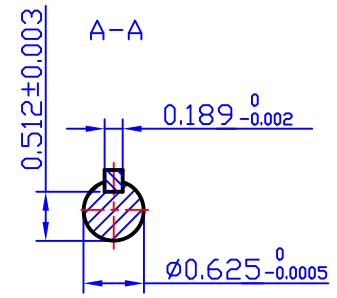

DIRECTION C

1:1

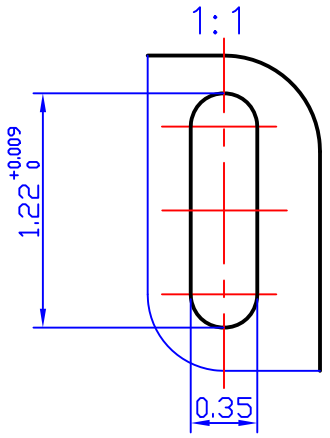

IND#	PH	HP	VOLT	Hz	RPM	S.F.	FRAME	ENCLOSURE	INSL.	DUTY	IP
SS134CN	3	1/3	575	60	1725	1.15	56C	TENV	F	CONT.	69K

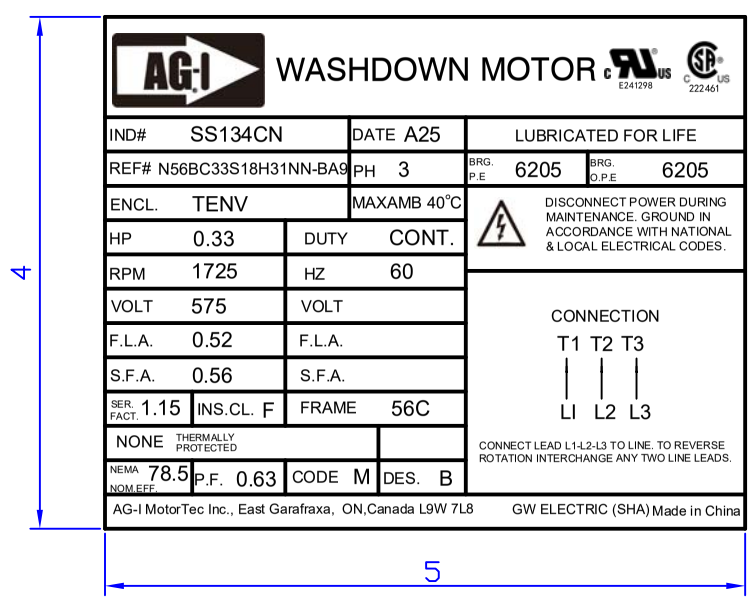

DR BY: MA XIAOLI		AG-I MOTORTEC INC.,	
APPD:		DESCRIPTION: SS134CN MOTOR OUTLINE & NAMEPLATE	
FIRST ANGLE PROJECTION	EDS DATE 2025.3.5	SIZE A3	DWG NO
	VERSION	SCALE 1:2	SHEET

CONFIDENTIAL PROPERTY OF GW ELECTRIC (SHANGHAI) CORPORATION AND ARE NOT TO BE DISCLOSED, DUPLICATED, OR OTHERWISE USED WITHOUT THE WRITTEN CONSENT OF GW ELECTRIC (SHANGHAI) CORPORATION, OR ITS AGENT, AG-I MOTORTEC INC.
-ALL RIGHTS RESERVED.