REV	ECO	REV BY	DATE	APPD	DATE

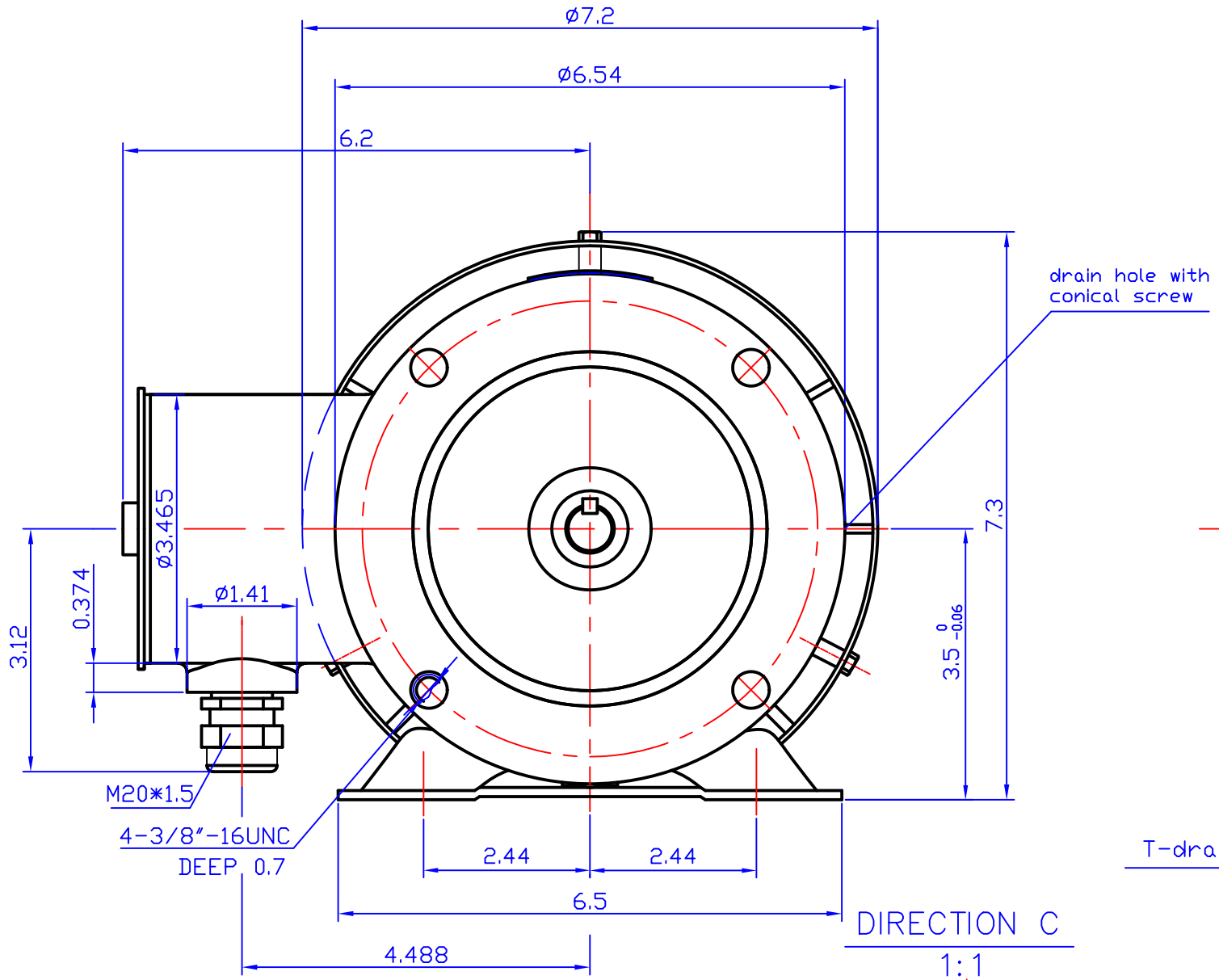

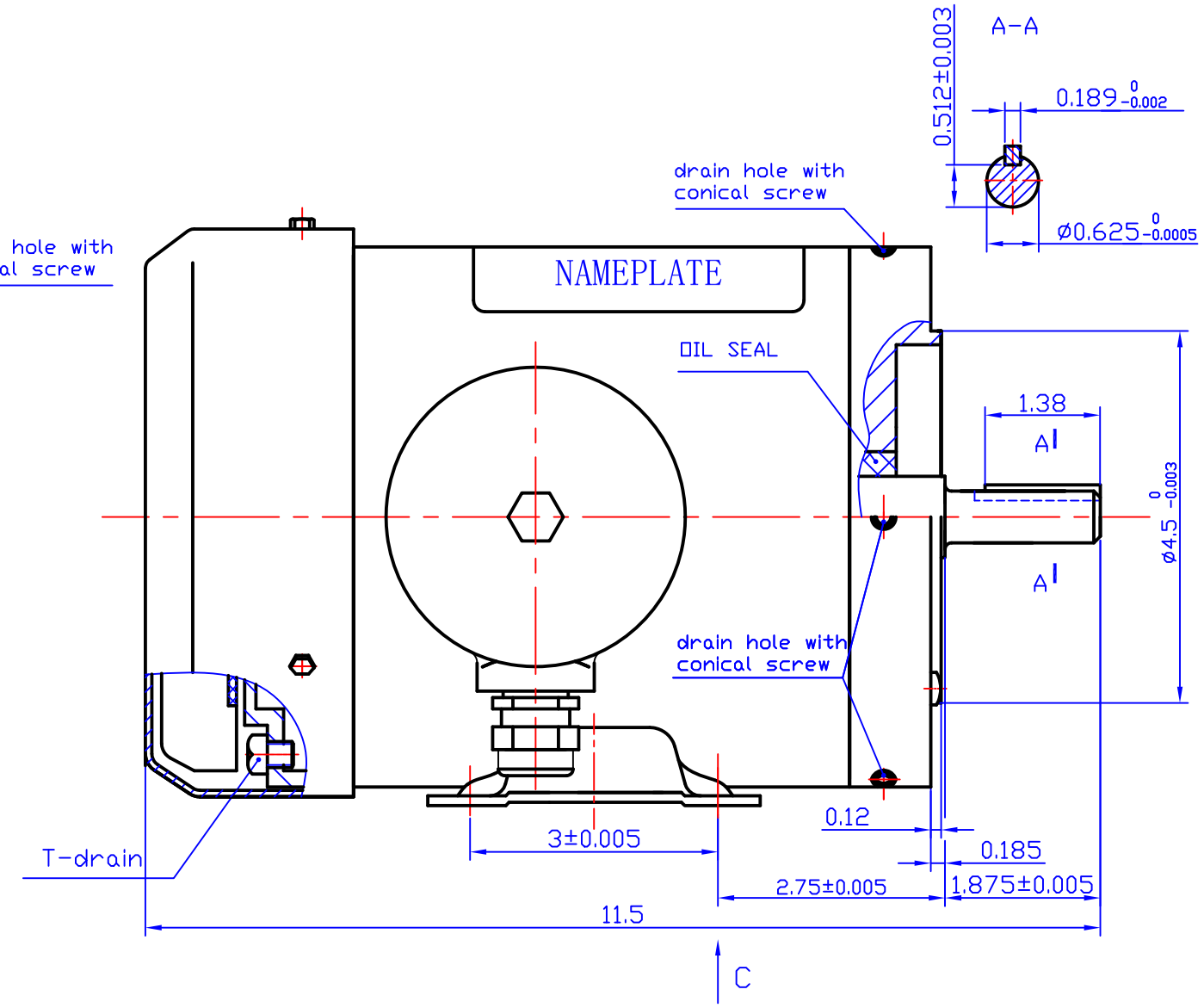

DIRECTION C
1:1

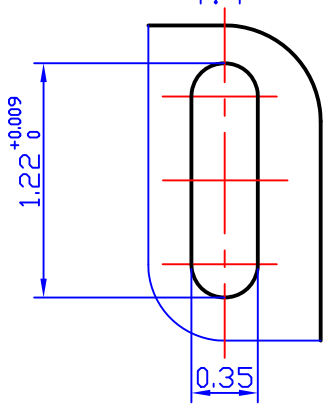

IND#	PH	HP	VOLT	Hz	RPM	S.F.	FRAME	ENCLOSURE	INSL.	DUTY	IP
SS344UF	3	3/4	230/460	60	1740	1.15	56C	TEFC	F	CONT.	69K
		1/2	190/380	50	1440						

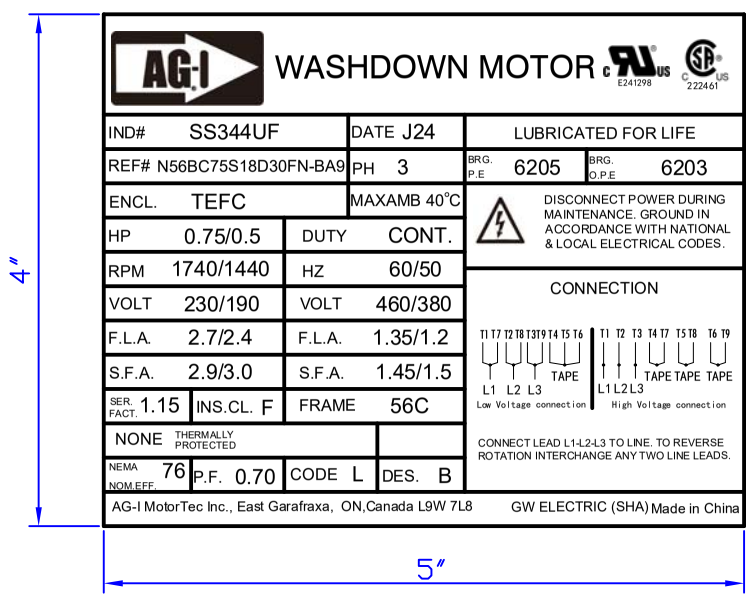

DR BY: MA XIAOLI	
APPD:	
FIRST ANGLE PROJECTION	EDS DATE 2025.1.18
	VERSION

CONFIDENTIAL PROPERTY OF GW ELECTRIC (SHANGHAI) CORPORATION AND ARE NOT TO BE DISCLOSED, DUPLICATED, OR OTHERWISE USED WITHOUT THE WRITTEN CONSENT OF GW ELECTRIC (SHANGHAI) CORPORATION, OR ITS AGENT, AG-I MOTORTEC INC.
-ALL RIGHTS RESERVED.

AG-I MOTORTEC INC.,

DESCRIPTION: SS344UF MOTOR OUTLINE & NAMEPLATE

SIZE: A3

DWG NO

SCALE: 1:2

SHEET