REV	ECO	REV BY	DATE	APPD	DATE

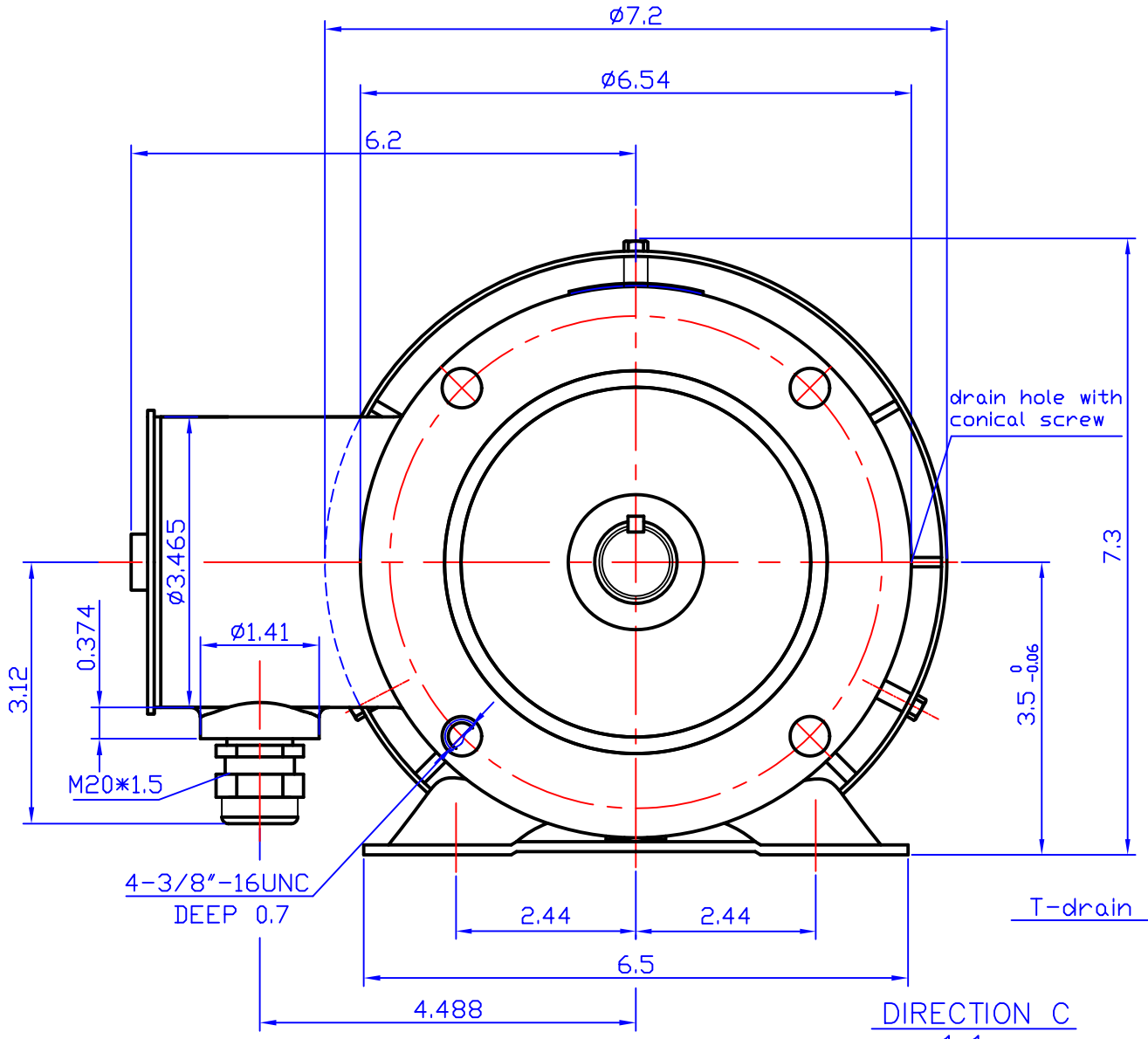

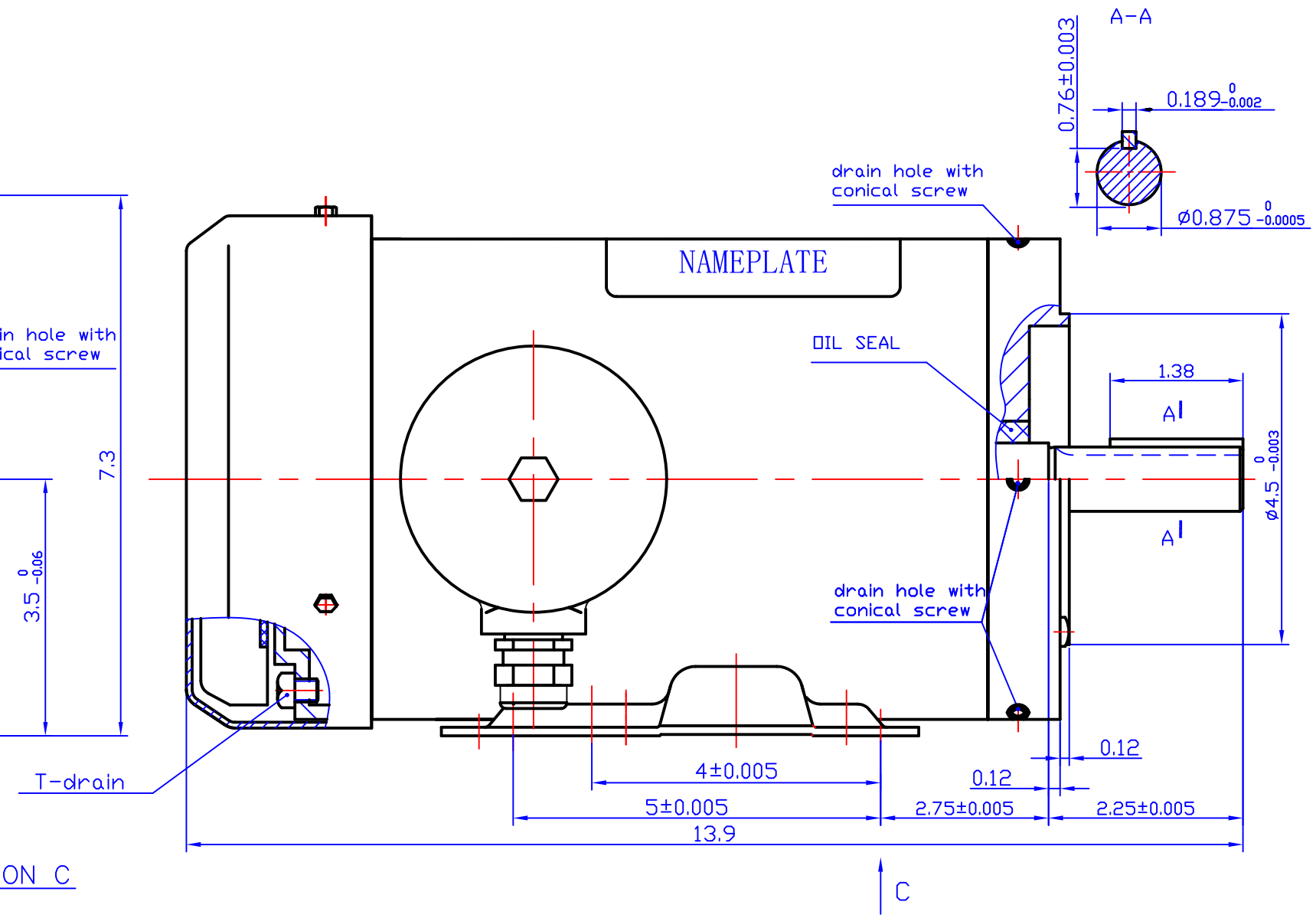

DIRECTION C
1:1

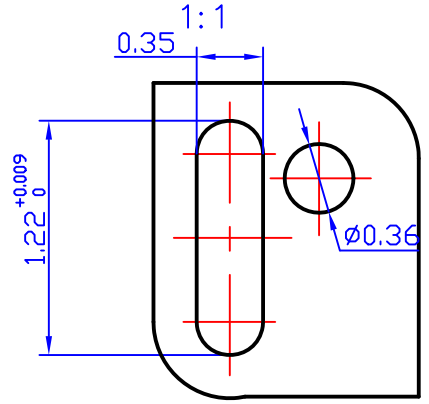

IND#	PH	HP	VOLT	Hz	RPM	S.F.	FRAME	ENCLOSURE	INSL.	DUTY	IP
SS32CFT	3	3.0	575	60	3450	1.15	145TC	TEFC	F	CONT.	69K

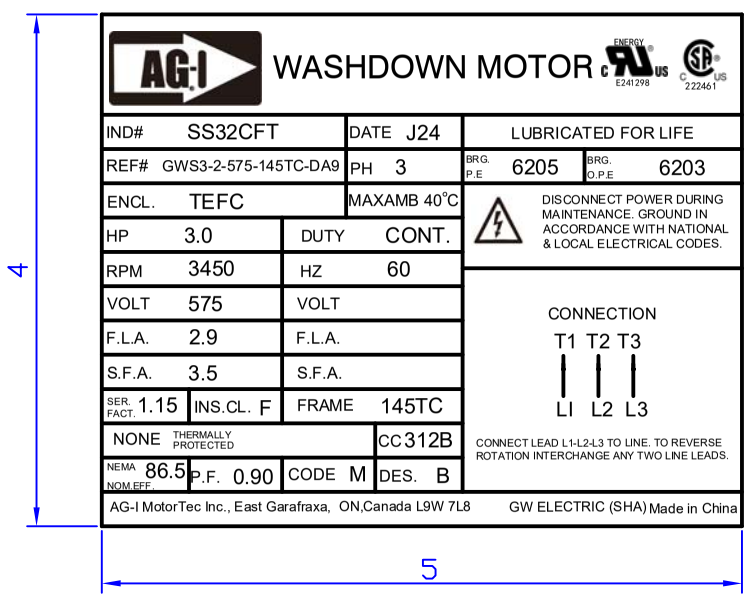

DR BY: Ma Xiaoli		AG-I MOTORTEC INC.,	
APPD:		DESCRIPTION	
FIRST ANGLE PROJECTION	EDS DATE 2025.1.18	SS32CFT MOTOR OUTLINE & NAMEPLATE	
	VERSION	SIZE A3	DWG NO
		SCALE 1:2	SHEET

CONFIDENTIAL PROPERTY OF GW ELECTRIC (SHANGHAI) CORPORATION AND ARE NOT TO BE DISCLOSED, DUPLICATED, OR OTHERWISE USED WITHOUT THE WRITTEN CONSENT OF GW ELECTRIC (SHANGHAI) CORPORATION, OR ITS AGENT, AG-I MOTORTEC INC.
-ALL RIGHTS RESERVED.