REV	ECO	REV BY	DATE	APPD	DATE

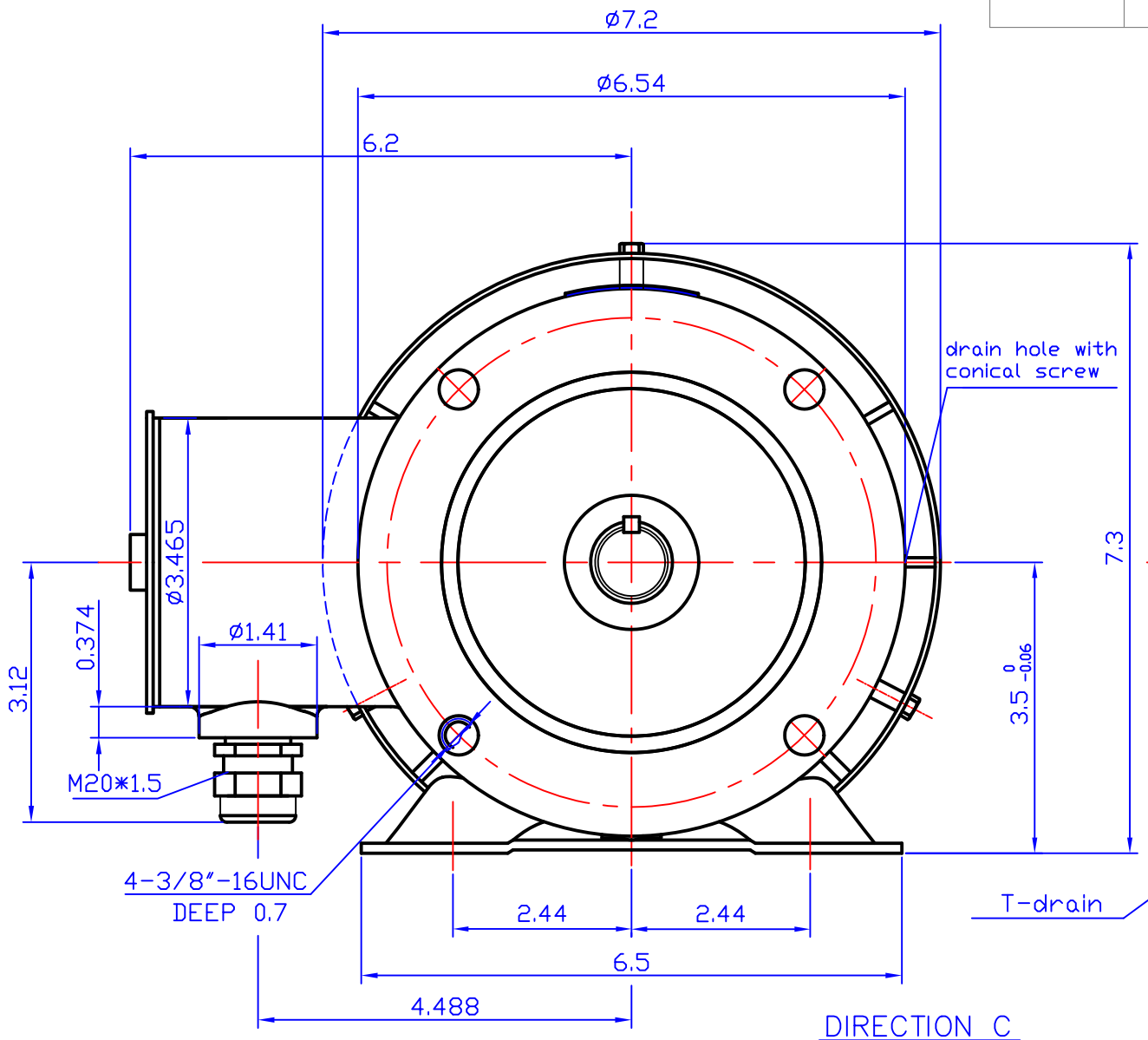

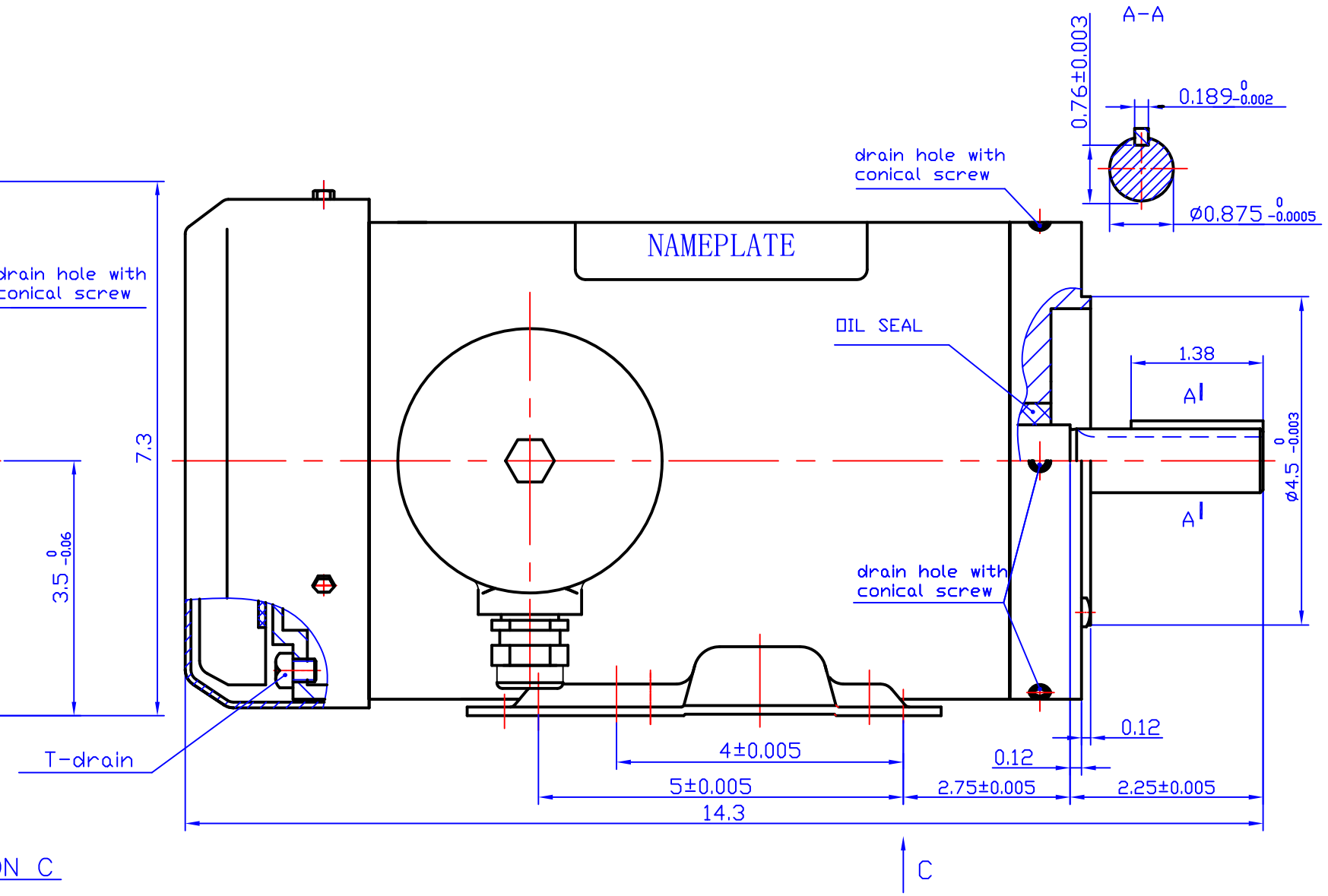

DIRECTION C
1:1

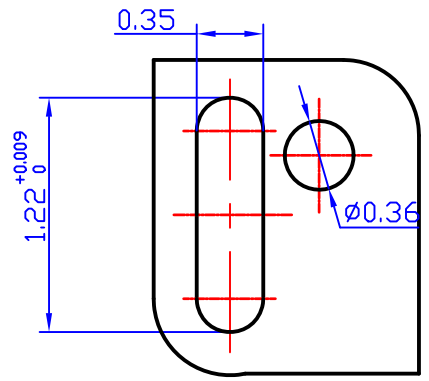

IND#	PH	HP	VOLT	Hz	RPM	S.F.	FRAME	ENCLOSURE	INSL.	DUTY	IP
SS24UFT	3	2	208-230/460	60	1745	1.15	145TC	TEFC	F	CONT.	69K
		1.5	190/380	50	1425						

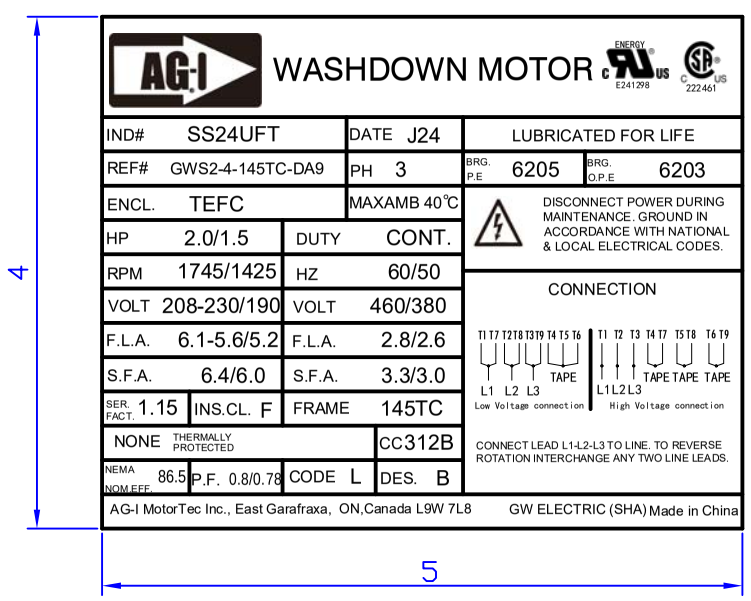

DR BY: Ma Xiaoli	
APPD:	
FIRST ANGLE PROJECTION	EDS DATE 2025.1.18
	VERSION

CONFIDENTIAL PROPERTY OF GW ELECTRIC (SHANGHAI) CORPORATION AND ARE NOT TO BE DISCLOSED, DUPLICATED, OR OTHERWISE USED WITHOUT THE WRITTEN CONSENT OF GW ELECTRIC (SHANGHAI) CORPORATION, OR ITS AGENT, AG-I MOTORTEC INC.
-ALL RIGHTS RESERVED.

AG-I MOTORTEC INC.,

DESCRIPTION

SS24UFT MOTOR OUTLINE & NAMEPLATE

SIZE	DWG NO	
A3		
SCALE 1:2		SHEET