REV	ECO	REV BY	DATE	APPD	DATE

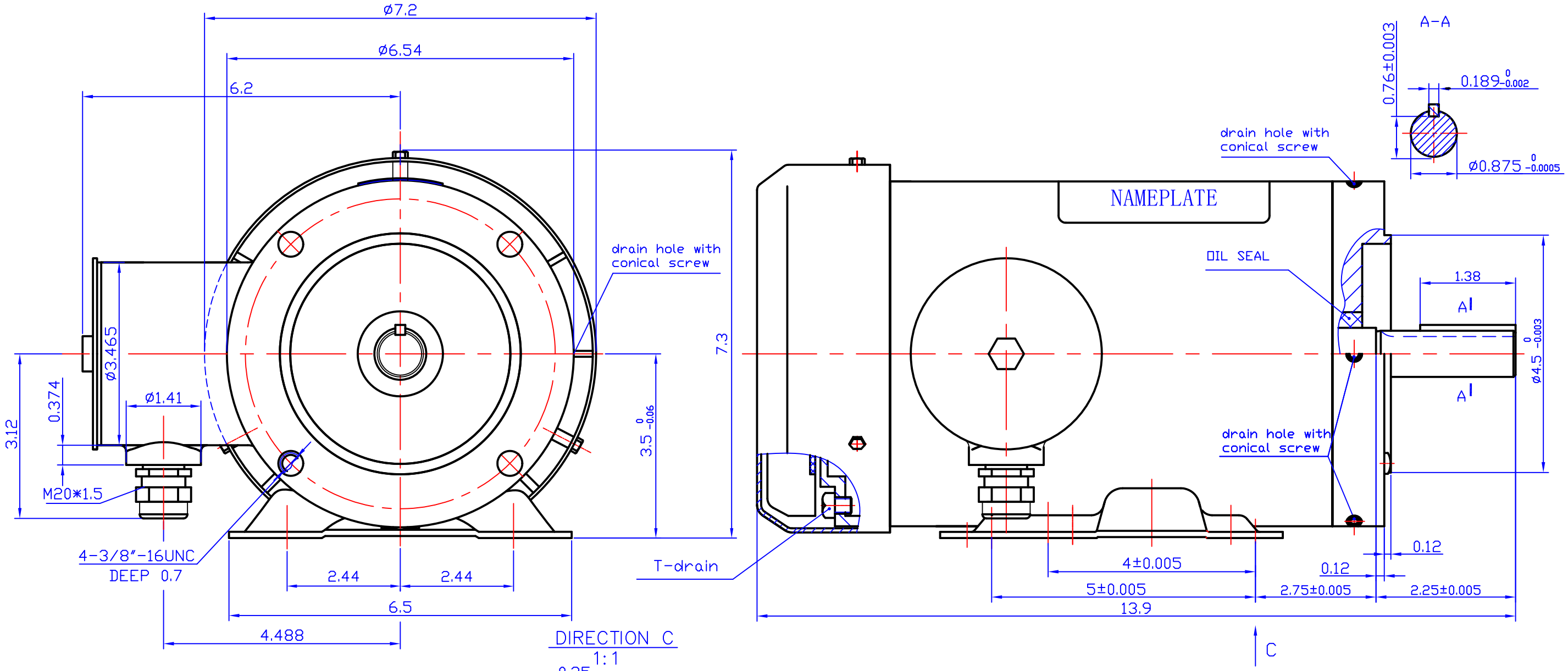

DIRECTION C
1:1

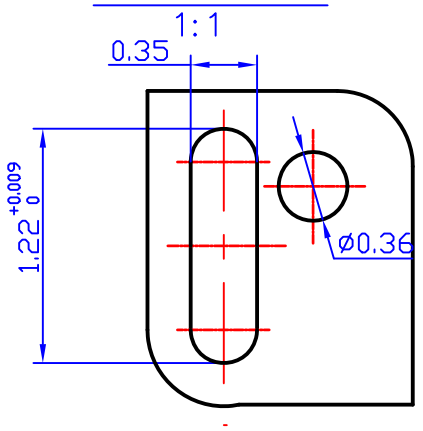

IND#	PH	HP	VOLT	Hz	S.F.	RPM	FRAME	ENCLOSURE	INSL.	DUTY	IP
SS22CFT	3	2.0	575	60	1.15	3450	145TC	TEFC	F	CONT.	69K

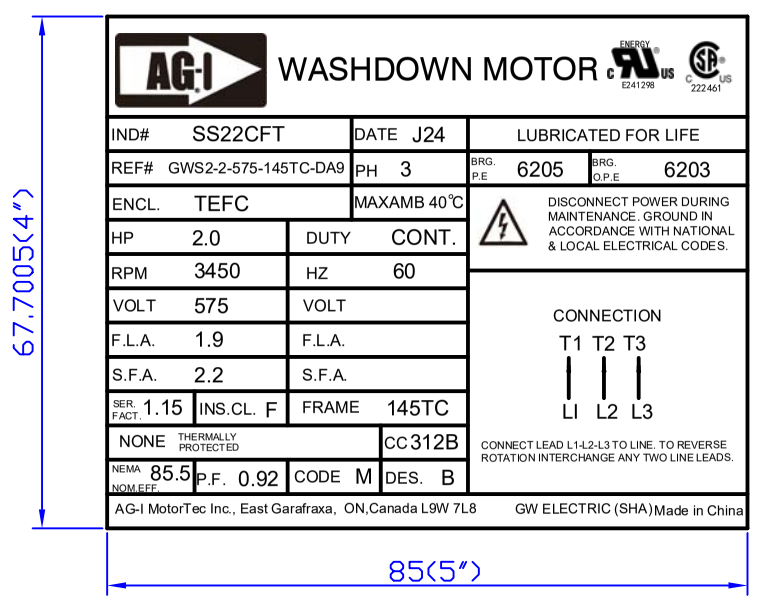

AG-I WASHDOWN MOTOR

IND# SS22CFT	DATE J24	LUBRICATED FOR LIFE	
REF# GWS2-2-575-145TC-DA9	PH 3	BRG. P.E 6205	BRG. O.P.E 6203
ENCL. TEFC	MAXAMB 40℃		
HP 2.0	DUTY CONT.		
RPM 3450	HZ 60		
VOLT 575	VOLT		
F.L.A. 1.9	F.L.A.		
S.F.A. 2.2	S.F.A.		
SER. FACT. 1.15	INS.CL. F	FRAME 145TC	
NONE THERMALLY PROTECTED		CC 312B	
NEMA NOM.EFF. 85.5	P.F. 0.92	CODE M	DES. B

DISCONNECT POWER DURING MAINTENANCE. GROUND IN ACCORDANCE WITH NATIONAL & LOCAL ELECTRICAL CODES.

CONNECTION
T1 T2 T3
L1 L2 L3
CONNECT LEAD L1-L2-L3 TO LINE. TO REVERSE ROTATION INTERCHANGE ANY TWO LINE LEADS.

AG-I MotorTec Inc., East Garafraxa, ON,Canada L9W 7L8 GW ELECTRIC (SHA) Made in China

DR BY: Ma Xiaoli

APPD:

FIRST ANGLE PROJECTION

EDS DATE 2025.1.18

VERSION

CONFIDENTIAL PROPERTY OF GW ELECTRIC (SHANGHAI) CORPORATION AND ARE NOT TO BE DISCLOSED, DUPLICATED, OR OTHERWISE USED WITHOUT THE WRITTEN CONSENT OF GW ELECTRIC (SHANGHAI) CORPORATION, OR ITS AGENT, AG-I MOTORTEC INC.
-ALL RIGHTS RESERVED.

AG-I MOTORTEC INC.,

DESCRIPTION

SS22CFT MOTOR OUTLINE & NAMEPLATE

SIZE A3

DWG NO

SCALE 1:2

SHEET