REV	ECO	REV BY	DATE	APPD	DATE

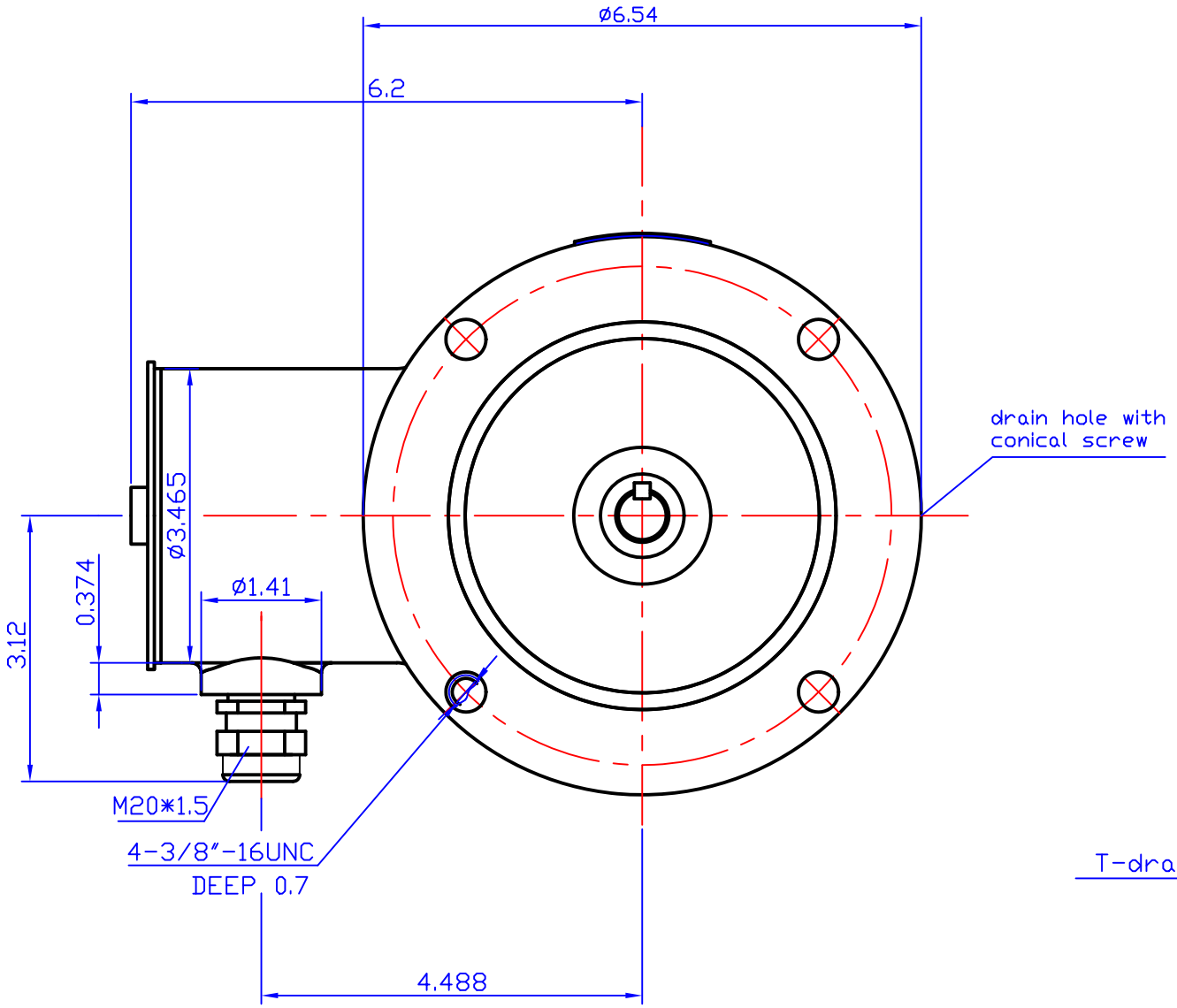

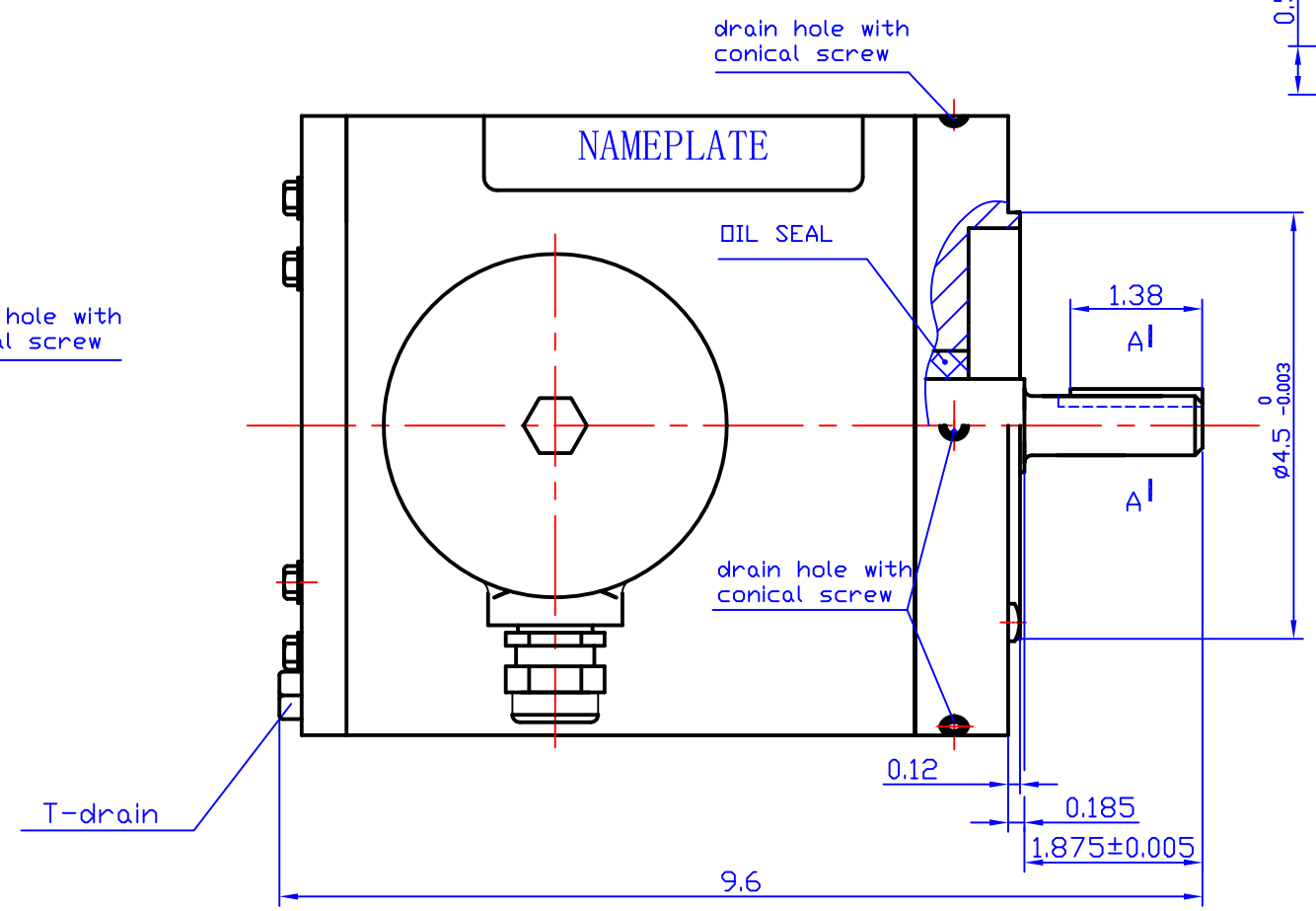

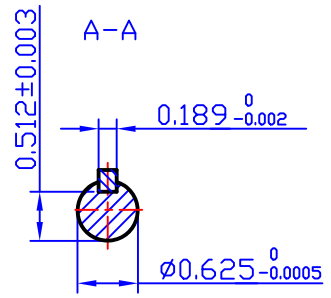

IND#	PH	HP	VOLT	Hz	RPM	S.F.	FRAME	ENCLOSURE	INSL.	DUTY	IP
SS124UNC	3	1/2	230/460	60	1725	1.15	56C	TENV	F	CONT.	69K
		1/3	190/380	50	1450						

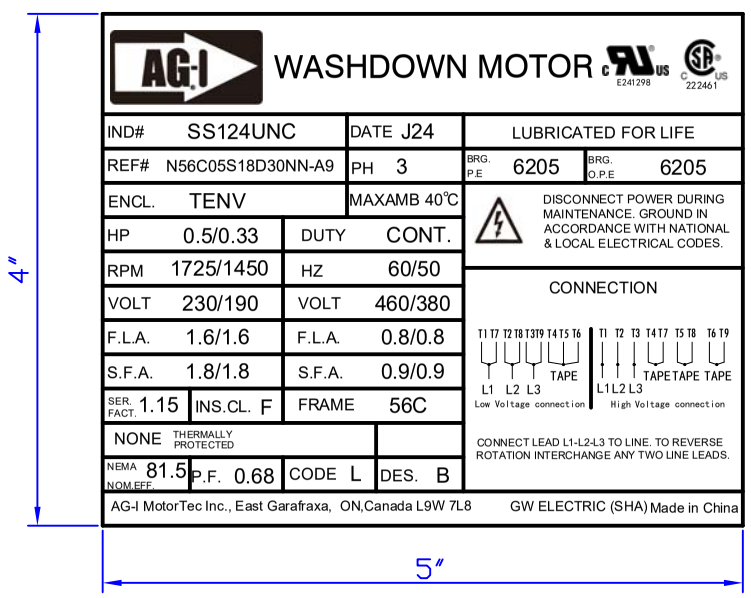

AG-I WASHDOWN MOTOR

IND# SS124UNC		DATE J24	LUBRICATED FOR LIFE
REF# N56C05S18D30NN-A9		PH 3	BRG. P.E 6205 / BRG. O.P.E 6205
ENCL. TENV		MAXAMB 40℃	DISCONNECT POWER DURING MAINTENANCE. GROUND IN ACCORDANCE WITH NATIONAL & LOCAL ELECTRICAL CODES.
HP 0.5/0.33	DUTY CONT.		
RPM 1725/1450	HZ 60/50		
VOLT 230/190	VOLT 460/380		CONNECTION
F.L.A. 1.6/1.6	F.L.A. 0.8/0.8		
S.F.A. 1.8/1.8	S.F.A. 0.9/0.9		
SER. FACT. 1.15	INS.CL. F	FRAME 56C	
NONE THERMALLY PROTECTED			CONNECT LEAD L1-L2-L3 TO LINE. TO REVERSE ROTATION INTERCHANGE ANY TWO LINE LEADS.
NEMA NOM.EFF. 81.5	P.F. 0.68	CODE L	DES. B
AG-I MotorTec Inc., East Garafraxa, ON,Canada L9W 7L8			GW ELECTRIC (SHA) Made in China

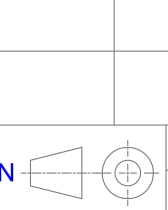

DR BY: MA XIAOLI		AG-I MOTORTEC INC.,	
APPD:		DESCRIPTION	
FIRST ANGLE PROJECTION	EDS DATE 2025.1.18	SS124UNC MOTOR OUTLINE & NAMEPLATE	
	VERSION	SIZE A3	DWG NO
		SCALE 1:2	SHEET

CONFIDENTIAL PROPERTY OF GW ELECTRIC (SHANGHAI) CORPORATION AND ARE NOT TO BE DISCLOSED, DUPLICATED, OR OTHERWISE USED WITHOUT THE WRITTEN CONSENT OF GW ELECTRIC (SHANGHAI) CORPORATION, OR ITS AGENT, AG-I MOTORTEC INC.
-ALL RIGHTS RESERVED.