REV	ECO	REV BY	DATE	APPD	DATE

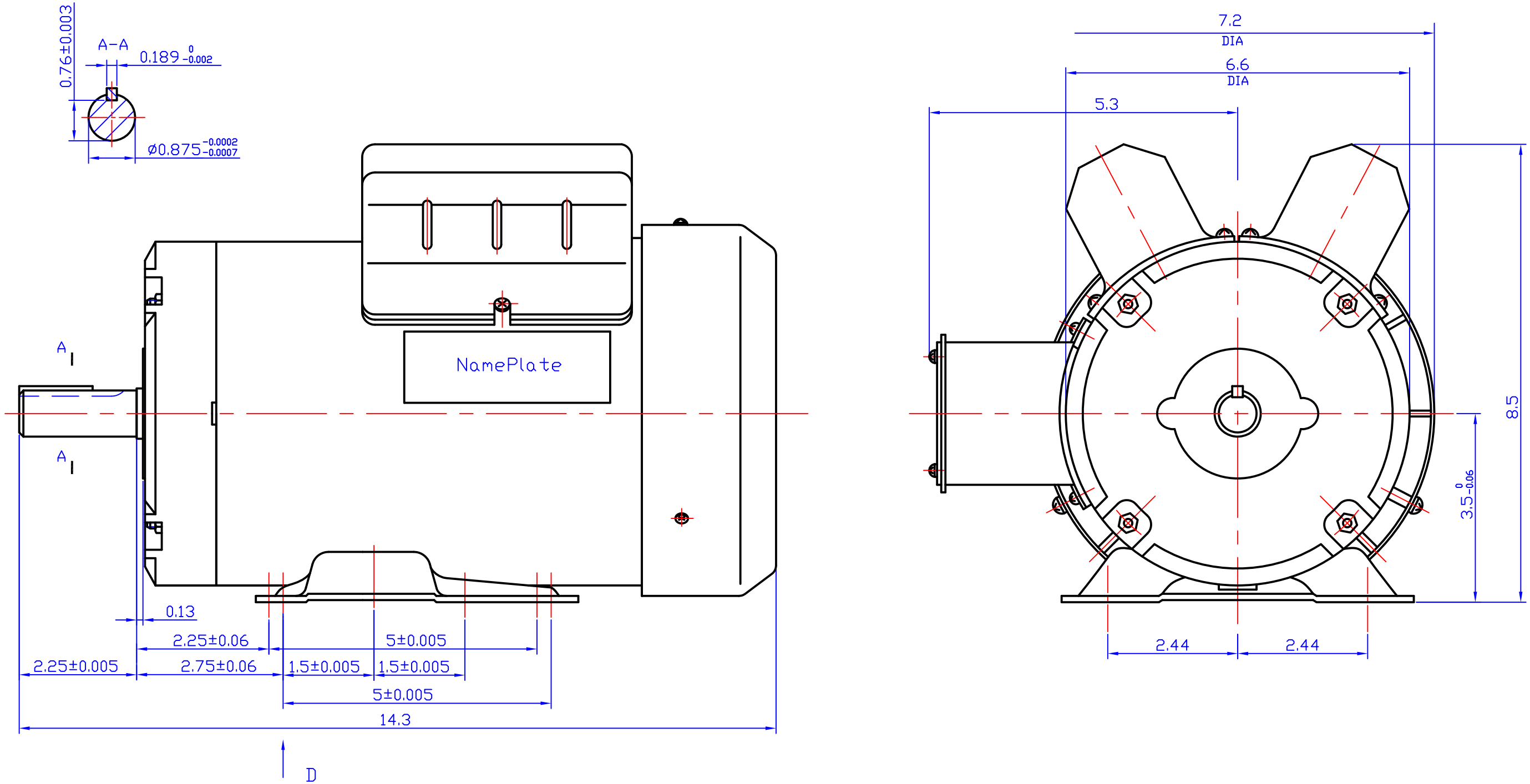

DIRECTION D

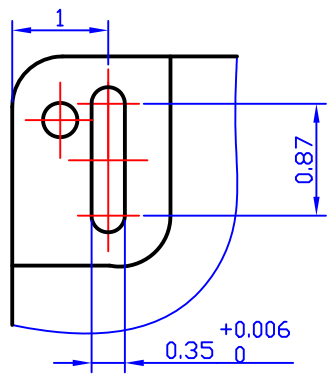

AG-I MODEL .No.	FRAME	HP	VOLTS	Hz	RPM	PH	S.F.	INSL.	Thermally Protector	endclose	DUTY
K302HF7BN14	56HZ	3.0	230	60	3450	1	1.0	F	NONE	TEFC	CONT.

DR BY:	
APPD:	Candy
FIRST ANGLE PROJECTION	EDS DATE 03/08/2023
	VERSION

CONFIDENTIAL PROPERTY OF GW ELECTRIC (SHANGHAI) CORPORATION AND ARE NOT TO BE DISCLOSED, DUPLICATED, OR OTHERWISE USED WITHOUT THE WRITTEN CONSENT OF GW ELECTRIC (SHANGHAI) CORPORATION, OR ITS AGENT, AG-I MOTORTEC INC.
- ALL RIGHTS RESERVED

AG-I MOTORTEC INC.,

DESCRIPTION

K341 K302HF7BN14

SIZE	DWG NO	
A3		
SCALE 1:2		SHEET